Premium hospital grade straight blade receptacles

Project Name:	Prepared By:
Project Number:	Date:
Catalog Number:	Type:

AH8200

AH8400

8410

8210

Description

2 Pole, 3-Wire Grounding
15A 125V/AC; 15A 250V/AC
20A 125V/AC; 20A 250V/AC
NEMA 5-15, 5-20, 6-15, 6-20

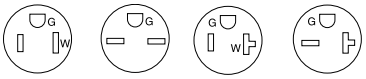

5-15R 6-15R 5-20R 6-20R

Design features

- Exclusive screw terminal guards provide fast, easy insulation from conductive surfaces (duplex only)
- Exclusive 5-leaf brass line contacts provide consistent performance and superior plug resistance (duplex only)
- Rigid, glass reinforced nylon base lends ultimate strength and superior high heat resistance in contact carrier (duplex only)
- 0.05" (1.27mm) solid brass mounting strap with non-riveted, integral one-piece grounding system for highest durability – assures superior ground integrity and corrosion resistance under heaviest use (duplex only)
- High impact and chemical-resistant nylon face
- Tapered back wiring lead-in slots assist in gathering stranded wires for faster, more secure connections
- All terminal and mounting screws are plated, triple combination (Slot/Phillips/Robertson) head for superior corrosion resistance and maximum flexibility
- Long, broad mounting strap helps reach large panel cutouts for code compliance
- Automatic grounding system eliminates need for bonding jumper in grounded metal enclosure, provides redundant measure of ground continuity where jumper used

Table 1. Premium Hospital Grade Receptacles, Back & Side Wire

Catalog No.	Description	Amps	Volts	Color Suffix
☐ AH8200__	NEMA 5-15R Premium Duplex Receptacle, Back & Side Wire	15	125	B, BK, GY, RD, V, W
☐ AH8200LT__	NEMA 5-15R Premium Illuminated Duplex Receptacle, Back & Side Wire	15	125	V, W
☐ 8210__	NEMA 5-15R Premium Single Receptacle, Back & Side Wire	15	125	B, GY, V, W
☐ AH8300__	NEMA 5-20R Premium Duplex Receptacle, Back & Side Wire	20	125	B, BK, GY, LA, RD, V, W
☐ AH8300LT__	NEMA 5-20R Premium Illuminated Duplex Receptacle, Back & Side Wire	20	125	RD, V
☐ 8310__	NEMA 5-20R Premium Single Receptacle, Back & Side Wire	20	125	B, RD, V, W
☐ AH8600__	NEMA 6-15R Premium Duplex Receptacle, Back & Side Wire	15	250	V, W
☐ 8610__	NEMA 6-15R Premium Single Receptacle, Back & Side Wire	15	250	V, W
☐ AH8400__	NEMA 6-20R Premium Duplex Receptacle, Back & Side Wire	20	250	B, GY, RD, V, W
☐ 8410__	NEMA 6-20R Premium Single Receptacle, Back & Side Wire	20	250	B, RD, V, W

EATON
Powering Business Worldwide

Compliances, specifications and availability are subject to change without notice.

Project Name:	Prepared By:
Project Number:	Date:
Catalog Number:	Type:

Applications

Arrow Hart's feature-rich line of hospital grade receptacles have been designed to meet and exceed the demanding requirements of UL498 and Federal Specification WC-596G to provide a consistent means of connectivity where downtime can be crucial. Features include high-impact and chemical-resistant nylon faces to withstand abuse and maintain structural integrity plus durable contact designs for long life blade retention. The entire line of hospital grade receptacles fulfill the requirements for long-term reliability, low maintenance and assured performance.

Table 2. Specifications

Catalog No.	AH8200, AH8300, AH8400, AH8600 Series	8210, 8310, 8410, 8610 Series
Device Type	**Premium Hospital Grade Duplex Receptacles**	**Hospital Grade Premium Receptacles**
Wiring Type	Back & side wire	Back & side wire
Testing & Code Compliance	• cULus Listed to UL 498, file no. E15058 • UL verified to Federal Spec. WC-596G • cULus certified to CSA spec C22.2, no. 42 • NOM certified	• Listed to UL 498, file no. E15058 • UL verified to Federal Spec. WC-596G • CSA certified to C22.2, no. 42, file no. 6914 (6233-01) • NOM certified
Environmental Specifications	**Flammability:** Meets UL 94 requirements; V2 rated **Temperature Rating:** -20ºC to 70ºC (-4°F to 158°F)	**Flammability:** Meets UL 94 requirements; V2 rated **Temperature Rating:** -20ºC to 90ºC (-4°F to 194°F)
Electrical Specifications	**Dielectric Voltage:** Withstands 2000V per UL 498 **Current Interrupting:** Yes, at full-rated current **Temperature Rise:** Max. 30°C (86°F) after 250 cycles of overload @ 200% of rated current (DC)	**Dielectric Voltage:** Withstands 2000V per UL 498 **Current Interrupting:** Yes, at full-rated current **Temperature Rise:** Max. 30°C (86°F) after 250 cycles of overload @ 200% of rated current (DC)
Mechanical Specifications	**Terminal Accommodation:** #14 - 10 AWG **Voltage Ratings:** Permanently marked on device	**Terminal Accommodation:** #14 - 10 AWG **Voltage Ratings:** Permanently marked on device

Table 3. Materials

Catalog No.	AH8200, AH8300, AH8400, AH8600 Series	8210, 8310, 8410, 8610 Series
Face	Nylon	Nylon
Base	Glass-filled nylon	Nylon
Strap	0.05" thick solid brass, nickel plated	0.05" thick steel, zinc plated
Auto Ground	Brass (nickel plated for AH8200/AH8300) clip	Phosphor bronze staple
Line Contacts	0.031" thick 5-leaf 688 grade high-performance brass	0.037" thick 3-leaf brass
Ground Contact	Integral	Riveted
Terminal Screws	#8-32 brass, neutral screw nickel plated	#8-32 steel, neutral screw nickel plated
Ground Screw	#8-32 steel, zinc plated (green)	#8-32 steel (green)
Screw Terminal Guards	PVC hinged doors	N/A

Table 4. Color Ordering Information

For ordering devices, include Cat. No. followed by the color code: B (Brown), BK (Black), GY (Gray) LA (Light Almond), RD (Red), V (Ivory), W (White)

B	BK	GY	LA	RD	V	W
(Brown)	(Black)	(Gray)	(Light Almond)	(Red)	(Ivory)	(White)

Compliances, specifications and availability are subject to change without notice.

Project Name:	Prepared By:
Project Number:	Date:
Catalog Number:	Type:

Product Dimensions

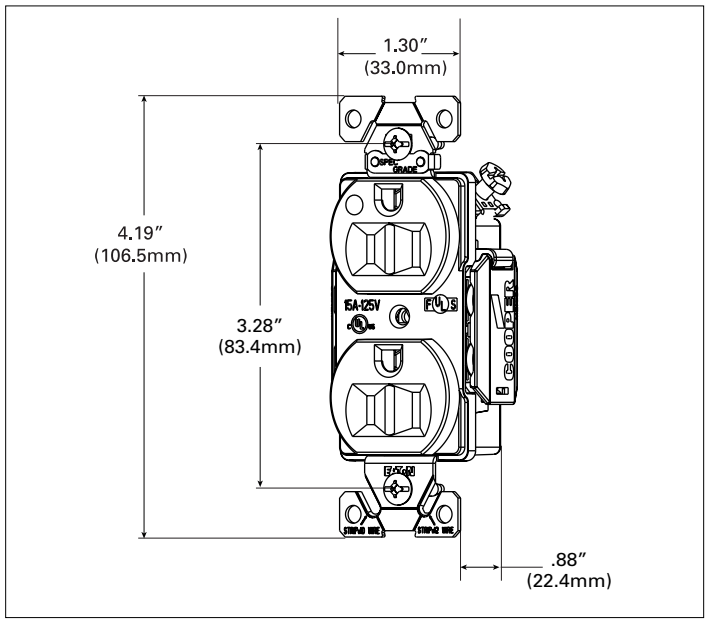

Figure 1. AH8200 Line Art with Dimensions

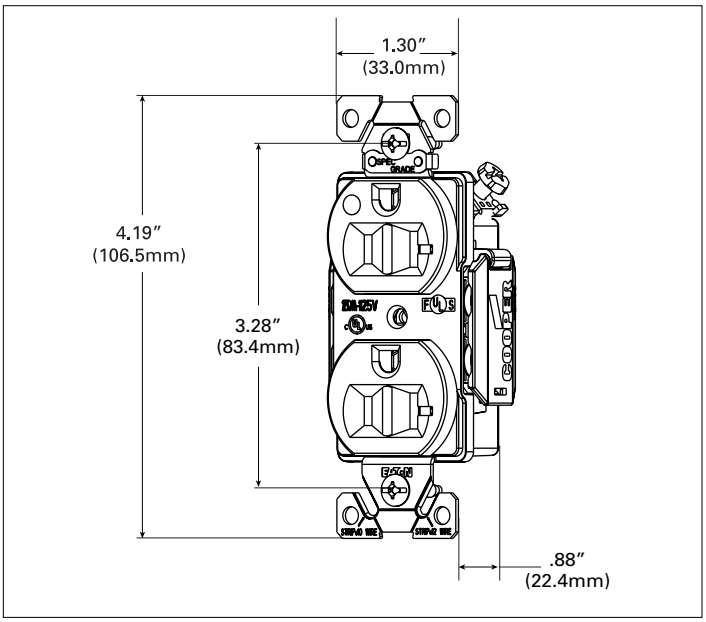

Figure 2. AH8300 Line Art with Dimensions

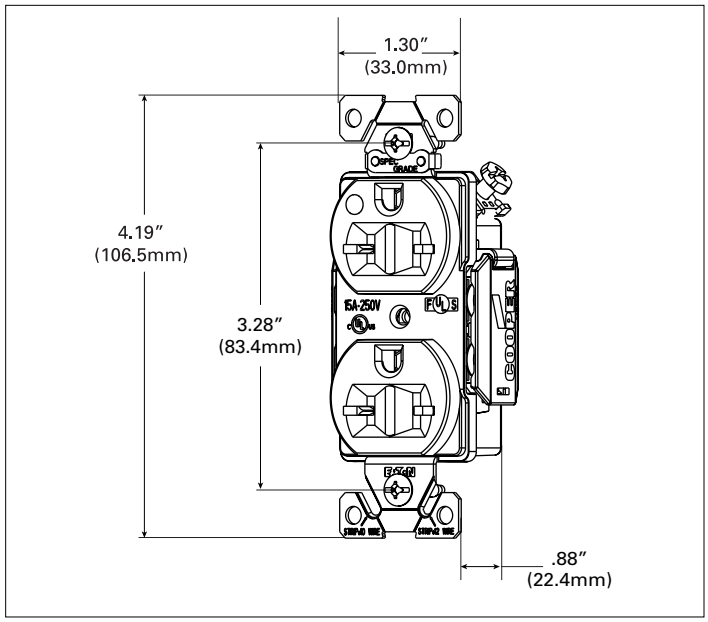

Figure 3. AH8600 Line Art with Dimensions

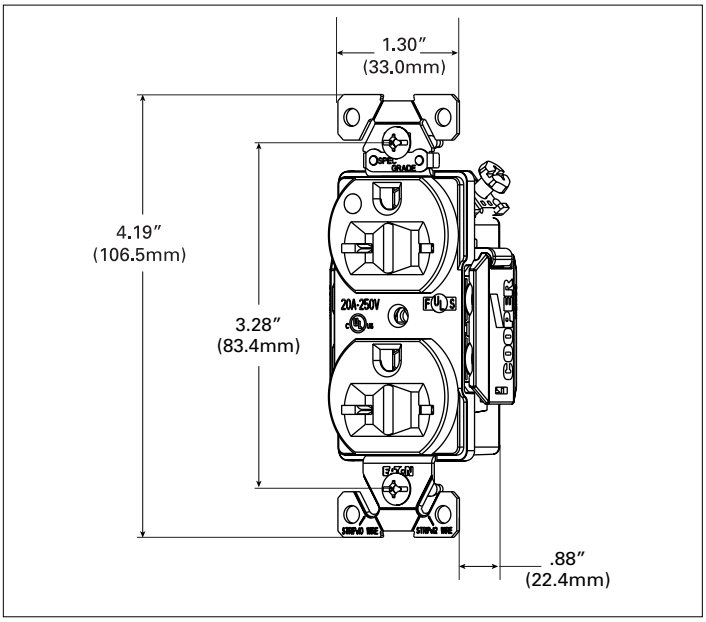

Figure 4. AH8400 Line Art with Dimensions

Project Name:	Prepared By:
Project Number:	Date:
Catalog Number:	Type:

Product Dimensions

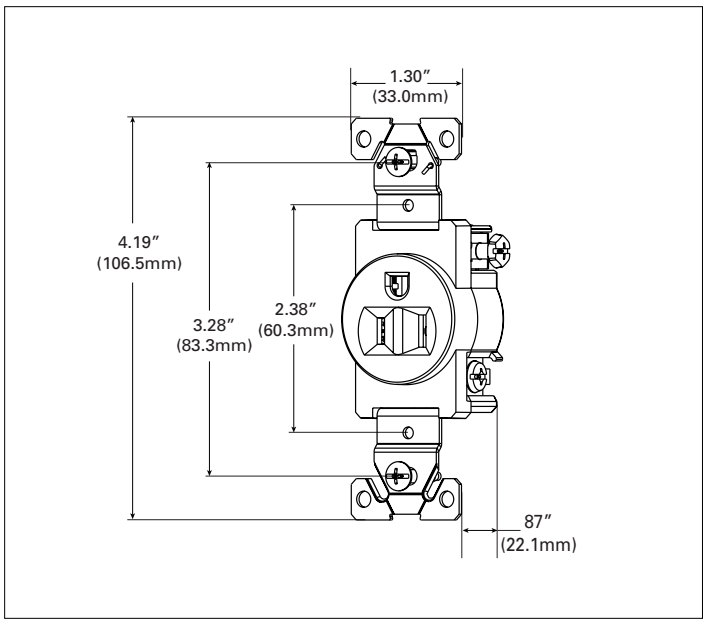

Figure 5. 8210 Line Art with Dimensions

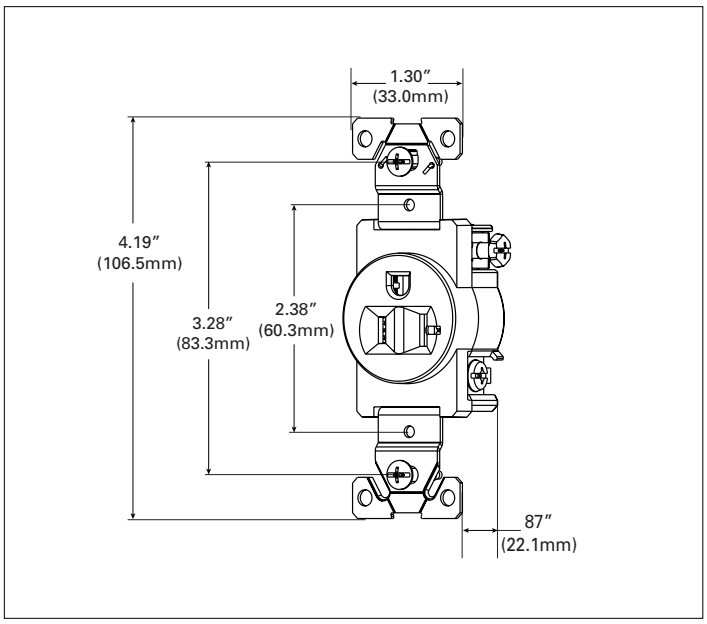

Figure 6. 8310 Line Art with Dimensions

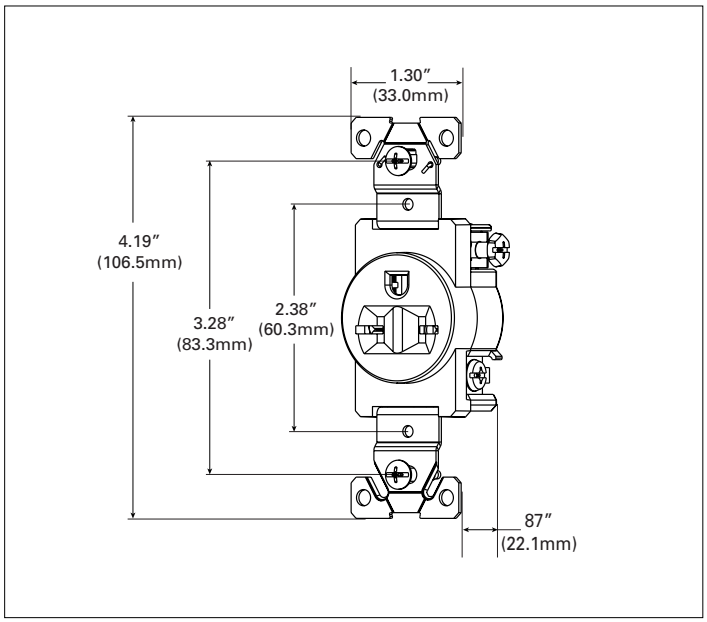

Figure 7. 8610 Line Art with Dimensions

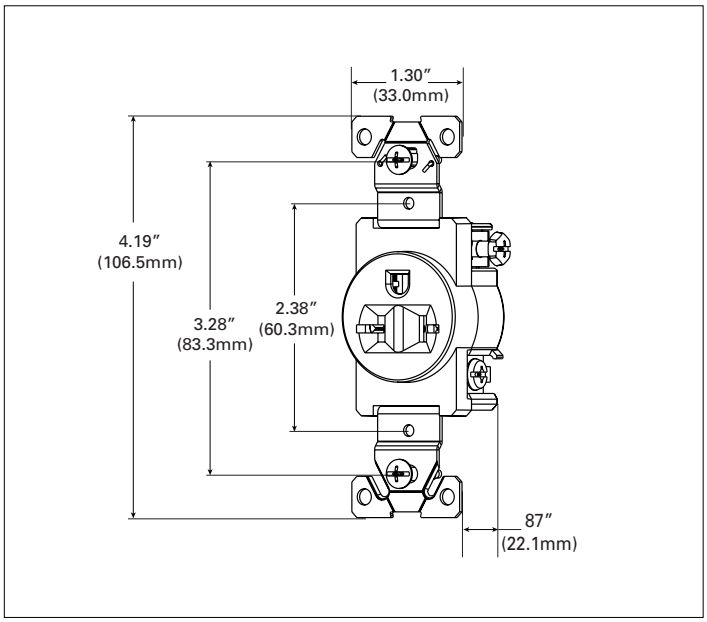

Figure 8. 8410 Line Art with Dimensions

Project Name:	Prepared By:
Project Number:	Date:
Catalog Number:	Type:

Certifications & Compliances

Catalog No.	cULus	UL	Fed Spec	NAFTA	CSA	NOM 426	Arrowlink	Build-To-Spec	ROHS
AH8200	•		•			•	•	•	•
AH8200LT	•		•			•	•	•	
8210		•	•	•	•	•	•	•	•
AH8300	•		•			•	•	•	•
AH8300LT	•		•			•	•	•	
8310		•	•	•	•	•	•	•	•
AH8600	•		•			•	•	•	•
8610		•	•	•	•	•		•	•
AH8400	•		•			•	•	•	•
8410		•	•	•	•	•		•	•

KEY: cULus, UL, Fed Spec, NAFTA, CSA, NOM, Arrowlink, Build-To-Spec, ROHS

Parts are manufactured and designed in accordance with article 4 of the European Union's RoHS2 directive 2011/65/EU

Build-To-Spec Customizable Devices

Compliances, specifications and availability are subject to change without notice.

Electrical Sector
203 Cooper Circle
Peachtree City, GA 30269
United States
Eaton.com
Eaton.com/arrowhart

Electrical Sector
Canada Operations
5925 McLaughlin Road
Mississauga, Ontario, L5R 1B8
Canada
EatonCanada.ca
Eaton.com/arrowhart

Electrical Sector
Mexico Operations
Carr. Tlalnepantla -
Cuautitlan Km 17.8 s/n
Col. Villa Jardin esq.
Cerrada 8 de Mayo
Cuautitlan, Mexico CP 54800
Mexico
Eaton.mx
Eaton.com/arrowhart

Powering Business Worldwide

Eaton
1000 Eaton Boulevard
Cleveland, OH 44122
United States
Eaton.com

© 2018 Eaton
All Rights Reserved
Printed in USA
Publication No. TD620026EN (REV. 1)
April 2018

Eaton is a registered trademark.

All other trademarks are property of their respective owners.